Application Area - Gear Housing

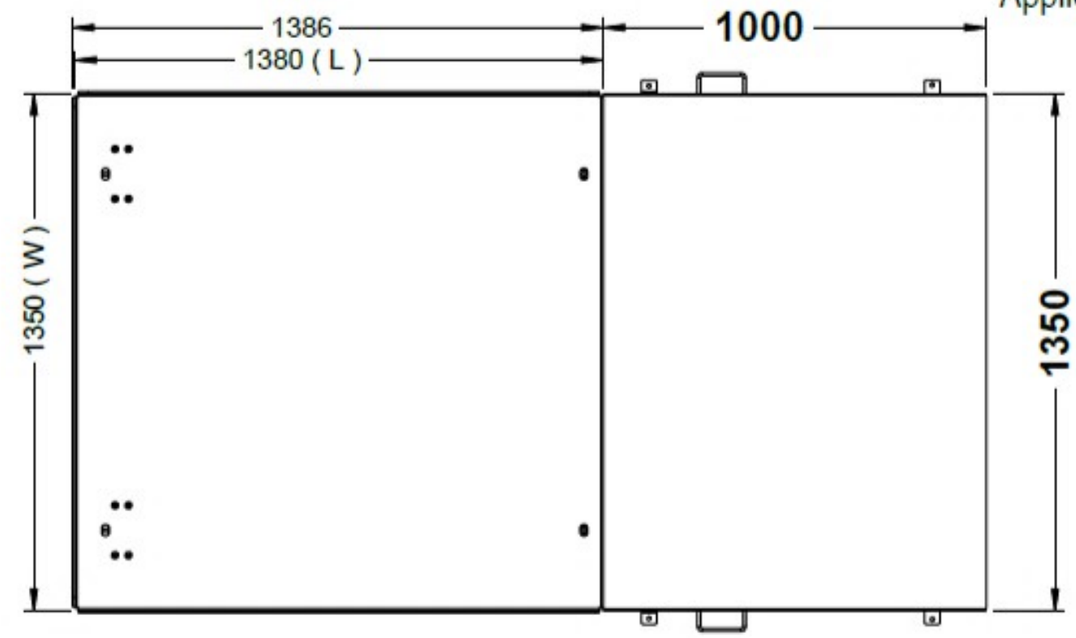

ISOMETRIC VIEW

PLEASE ASK IF IN DOUBT

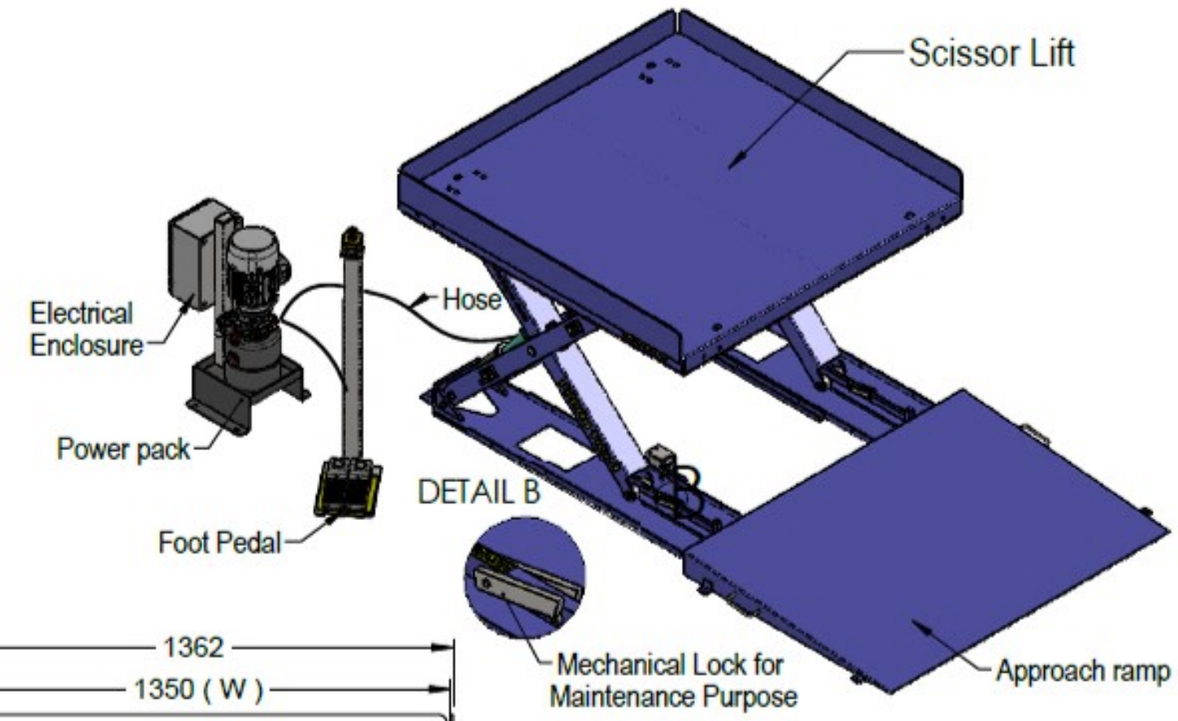

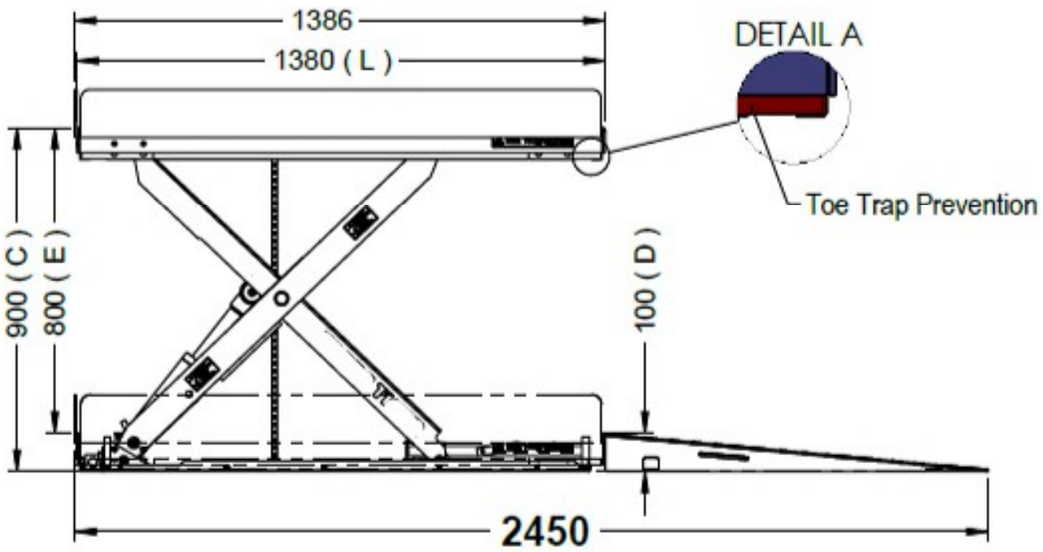

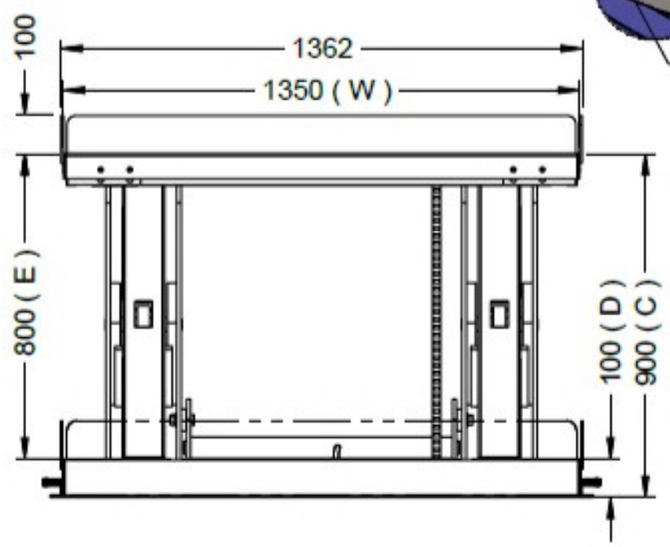

Ramp width increased

SPECIFICATION	
Capacity	1500kgs UDL
Top Platform Size (L x W)	1380x1350mm
Shape of Platform	R Shaped Type
Maximum Height (C)	900mm
Minimum Height (D)	100mm
Travelling Lift (E)	800mm
Power Source	3ph 415V With Neutral
Induction Motor	1.5HP 1440 RPM 50Hz
Raising Time	25-27Sec
Lowering Time	23-25Sec(Adjustable)
Control	Foot Pedal
Paint Color	RAL - 5017

CLEAN UP	ROUGHING	MACHINE FINISH	GRINDING FINISH	Material	M.S	Description	STD	QTY	01	Raw Material Wt.		Finished Wt.	0.00

AFZA www.afzamaterial.com

CUSTOMER

AFZA Material Handling and Storage Systems

S.No.156/3 (D.No.4/46D), Masthan Nagar, Gangaleri Village&Post, Royakottai Road, Krishnagiri-635 122, Tamil Nadu, India.
Mobile: +91-97509-57733, +91-86107-44874, E-mail: afzaindia@gmail.com, afzaindia@outlook.com, website: www.afzamaterial.com

MODEL: LH 100 R 1.5T

TITLE: G A D FOR APPROVAL

ALL DIMENSIONS ARE IN MM		DATE	SCALE	NTS
DESIGNED	PAVAN	11/03/23	DRAWING NUMBER	REVISION
DRAWN	PAVAN	11/03/23	2 LH 00 00 00B	02
APPROVED	S U	11/03/23		
FORMAT NO: FFPL-DPD-F-14 00			SHEET	-